This drawing is provisional and subject to our reconfirmation and/or revision without notice.

DH1～DH2＝16171（±20）

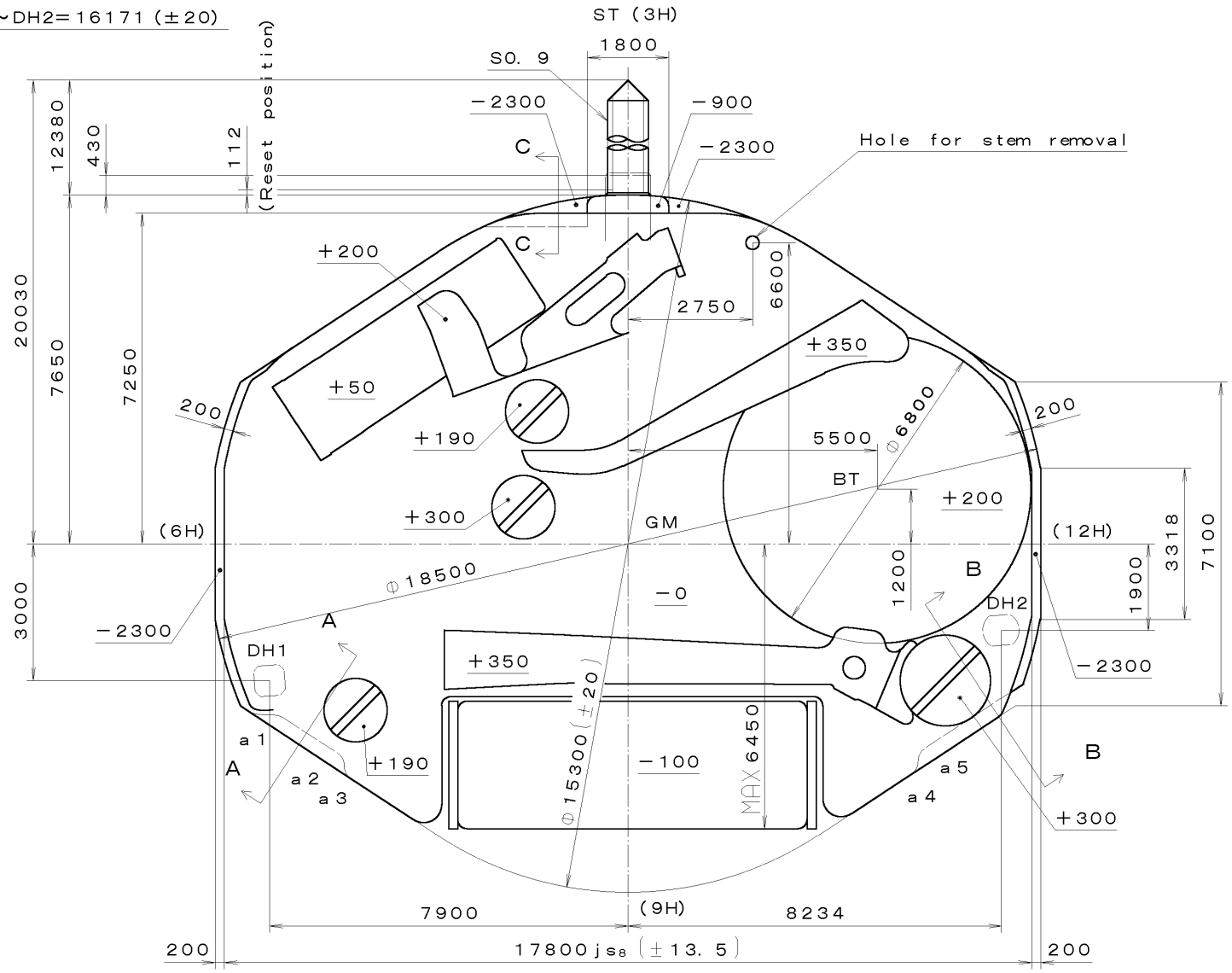

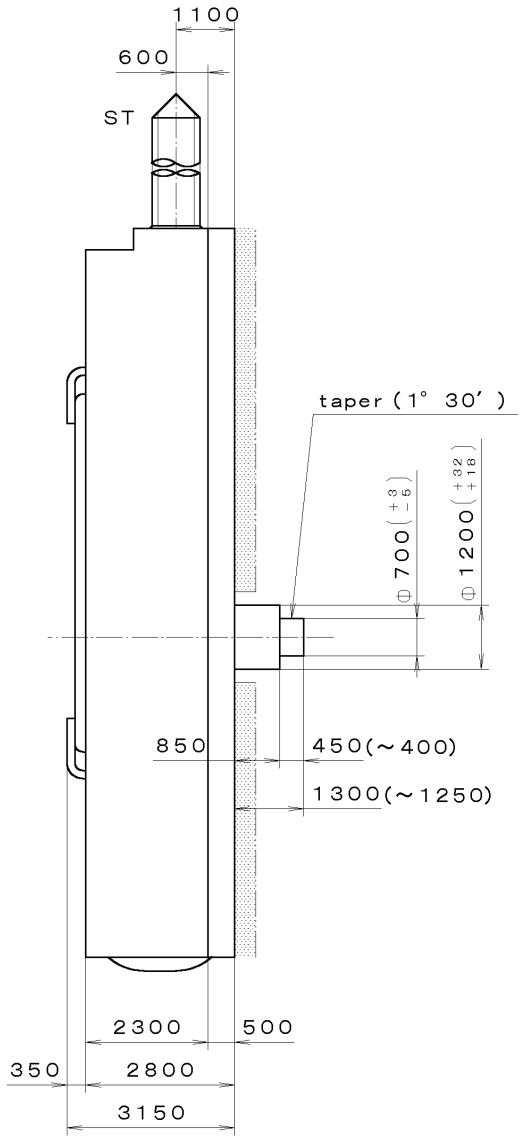

Coordinates

Mark	X	Y	R
GM	0	0	——
a 1	−7838	−4250	500
a 2	−6550	−4855	300
a 3	−5951	−4888	300
a 4	6101	−4790	300
a 5	6700	−4756	300

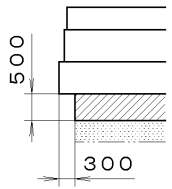

Section A−A

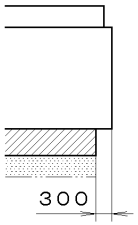

Section B−B

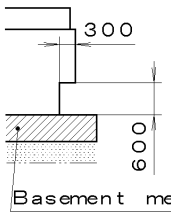

Section C−C

7			Quantity		Cal. No. : 2025
6			Unit	1/1000 mm	
5			Scale	10:1	Parts:
4			Date		
3			Drawn		
2			Checked	T. Hiruta	Name: Frame for Case
1			Approved		
Material					Drawing No. : 2025C000
Heat Treatment			General Tolerances		CITIZEN WATCH CO., LTD. TOKYO, JAPAN
Hardness			Dimensions		
Plating			Angles		

*** TIPW 2025 (01) *** (2100 1121) 00-10-19

This drawing is provisional and subject to our reconfirmation and/or revision without notice.

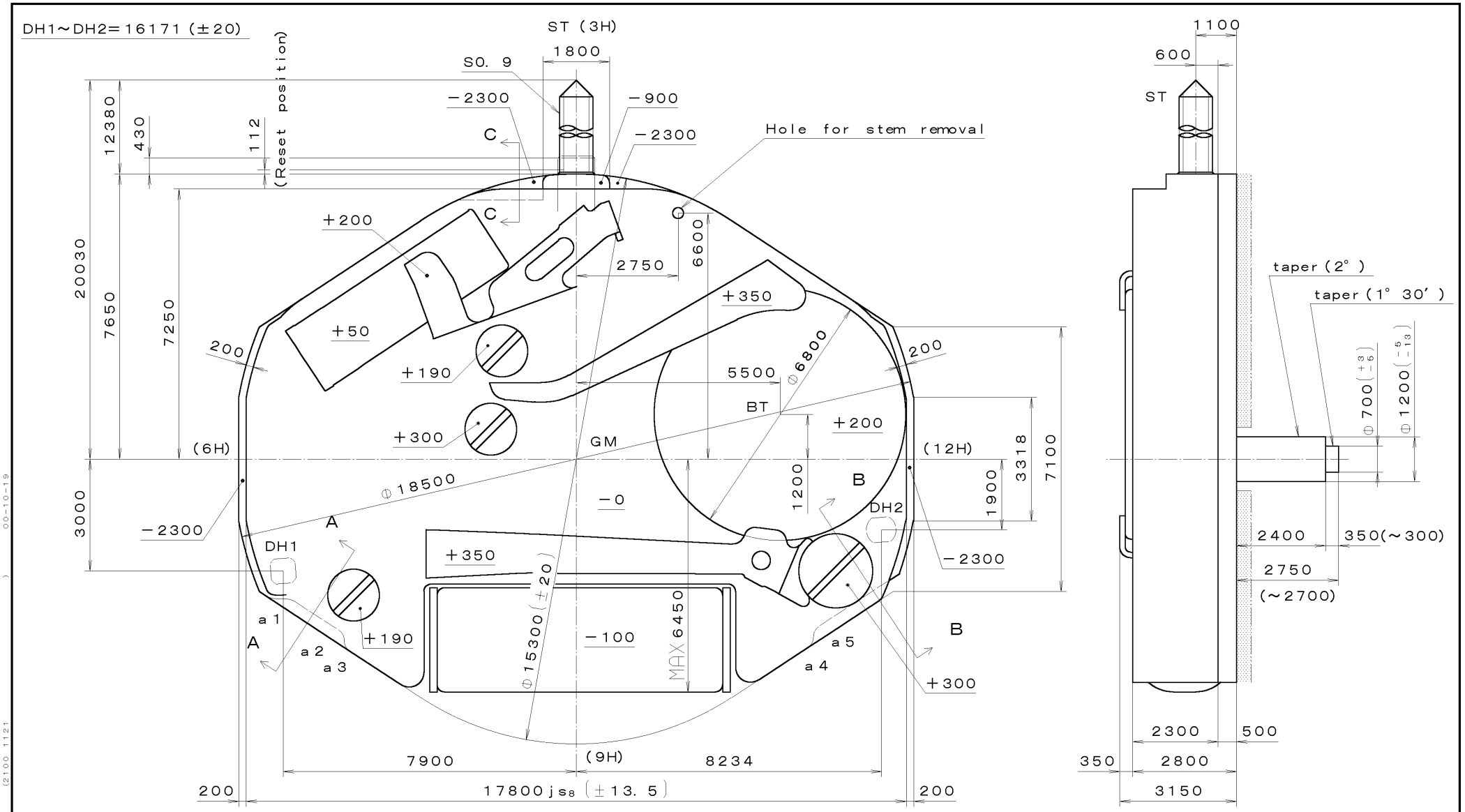

Coordinates

Mark	X	Y	R
GM	0	0	——
a 1	−7838	−4250	500
a 2	−6550	−4855	300
a 3	−5951	−4888	300
a 4	6101	−4790	300
a 5	6700	−4756	300

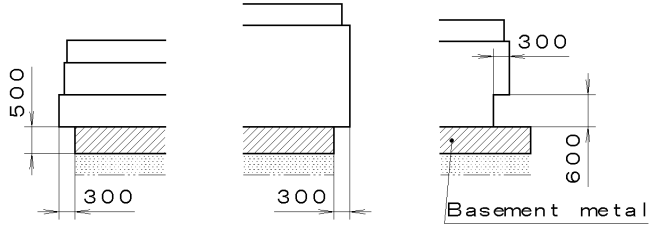

Section A−A Section B−B Section C−C

7			Quantity		Cal. No. : 2026
6			Unit	1/1000 mm	
5			Scale	10:1	Parts:
4			Date		
3			Drawn		
2			Checked	T. Hiruta	Name: Frame for Case
1			Approved		Drawing No. : 2026C000
Material					
Heat Treatment			General Tolerances		CITIZEN WATCH CO., LTD. TOKYO, JAPAN
Hardness			Dimensions		
Plating			Angles		

*** TIPW 2026 (01) *** (2100 1121) 00-10-19

This drawing is provisional and subject to our reconfirmation and/or revision without notice.

DH1～DH2＝16171（±20）

ST（3H）

1800

S0. 9

−2300

−900

−2300

C

C

Hole for stem removal

(Reset position)

12380

430

112

20030

7650

7250

3000

+200

+50

+190

+300

+350

2750

6600

200

5500

Φ6800

BT

+200

−2300

200

(6H)

(12H)

GM

Φ18500

−0

1200

B

3318

7100

1900

DH2

−2300

DH1

A

+350

Φ15300（±20）

MAX 6450

−100

+190

a 1

A

a 2

a 3

a 5

a 4

B

+300

7900

(9H)

8234

200

17800js8（±13. 5）

200

1100

600

ST

2560（～2510）

460（～410）

1850

250（～200）

Φ170（±4）

Φ700（+3 −5）

Φ1200（−5 −13）

taper（1° 30′）

taper（2°）

2300

500

350

2800

3150

Coordinates

Mark	X	Y	R
GM	0	0	——
a 1	−7838	−4250	500
a 2	−6550	−4855	300
a 3	−5951	−4888	300
a 4	6101	−4790	300
a 5	6700	−4756	300

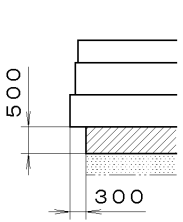

Section A−A

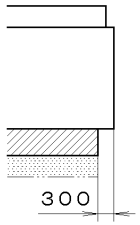

Section B−B

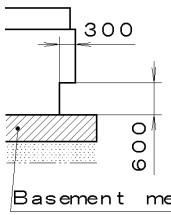

Section C−C

7			Quantity		Cal. No. : 2033
6			Unit	1/1000 mm	
5			Scale	10:1	Parts:
4			Date		
3			Drawn		
2			Checked	T. Hiruta	Name: Frame for Case
1			Approved		Drawing No. : 2033C000
Material					
Heat Treatment			General Tolerances		CITIZEN WATCH CO., LTD. TOKYO, JAPAN
Hardness			Dimensions		
Plating			Angles		

*** TIPW 2033 (01) *** (2100 1121) 00-10-19

This drawing is provisional and subject to our reconfirmation and/or revision without notice.

DH1～DH2＝16171（±20）

ST（3H）

1800

S0. 9

−2300

−900

−2300

C

C

Hole for stem removal

12380

430

112

(Reset position)

20030

7650

7250

3000

+200

+50

+190

+300

+350

2750

6600

200

5500

Φ6800

BT

+200

−2300

200

(6H)

GM

(12H)

3318

7100

1900

1200

B

Φ18500

−0

DH2

−2300

DH1

A

+350

Φ15300（±20）

MAX 6450

−100

+190

a 1

A

a 2

a 3

a 4

a 5

B

+300

7900

(9H)

8234

200

17800js8（±13. 5）

200

1100

600

ST

1800（～1750）

400（～350）

850

550（～500）

Φ170（±4）

Φ700（+3 −5）

Φ1200（+32 +18）

taper（1° 30′）

2300

500

350

2800

3150

Coordinates

Mark	X	Y	R
GM	0	0	——
a 1	−7838	−4250	500
a 2	−6550	−4855	300
a 3	−5951	−4888	300
a 4	6101	−4790	300
a 5	6700	−4756	300

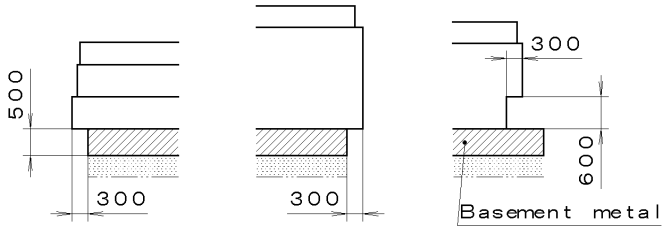

Section A−A　Section B−B　Section C−C

7			Quantity		Cal. No. : 2034
6			Unit	1/1000 mm	
5			Scale	10:1	Parts:
4			Date		
3			Drawn		
2			Checked	T. Hiruta	Name: Frame for Case
1			Approved		Drawing No. : 2034C000
Material					
Heat Treatment			General Tolerances		CITIZEN WATCH CO., LTD. TOKYO, JAPAN
Hardness			Dimensions		
Plating			Angles		

*** TIPW 2034 (01) *** (2100 1121) 00-10-19

This drawing is provisional and subject to our reconfirmation and/or revision without notice.

DH1～DH2＝16171（±20）

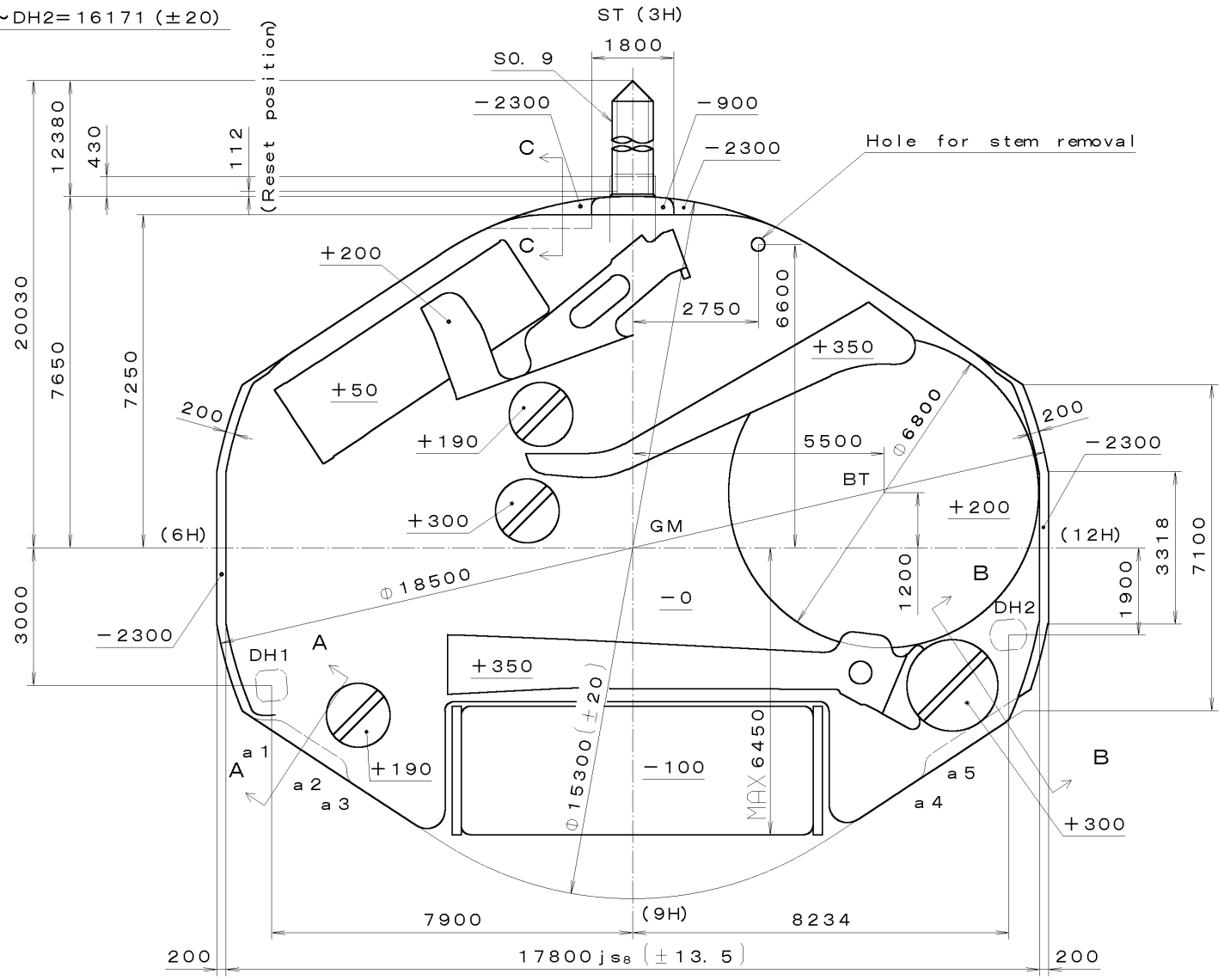

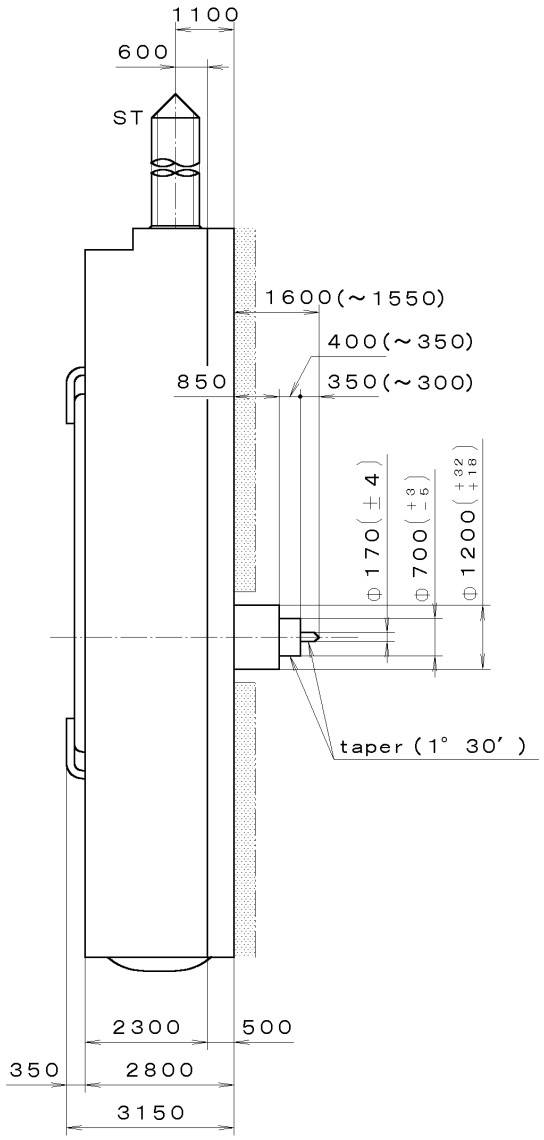

Coordinates

Mark	X	Y	R
GM	0	0	——
a 1	−7838	−4250	500
a 2	−6550	−4855	300
a 3	−5951	−4888	300
a 4	6101	−4790	300
a 5	6700	−4756	300

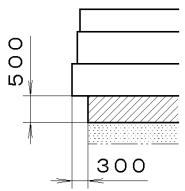

Section A−A

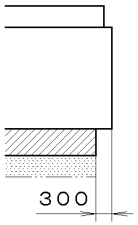

Section B−B

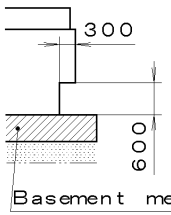

Section C−C

7			Quantity		Cal. No. : 2035
6			Unit	1/1000 mm	
5			Scale	10:1	Parts:
4			Date		
3			Drawn		
2			Checked	T. Hiruta	Name: Frame for Case
1			Approved		Drawing No. : 2035C000
Material					
Heat Treatment			General Tolerances		CITIZEN WATCH CO., LTD. TOKYO, JAPAN
Hardness			Dimensions		
Plating			Angles		

*** TIPW 2035 (01) *** (2100 1121) 00-10-19

This drawing is provisional and subject to our reconfirmation and/or revision without notice.

DH1～DH2＝16171 (±20)

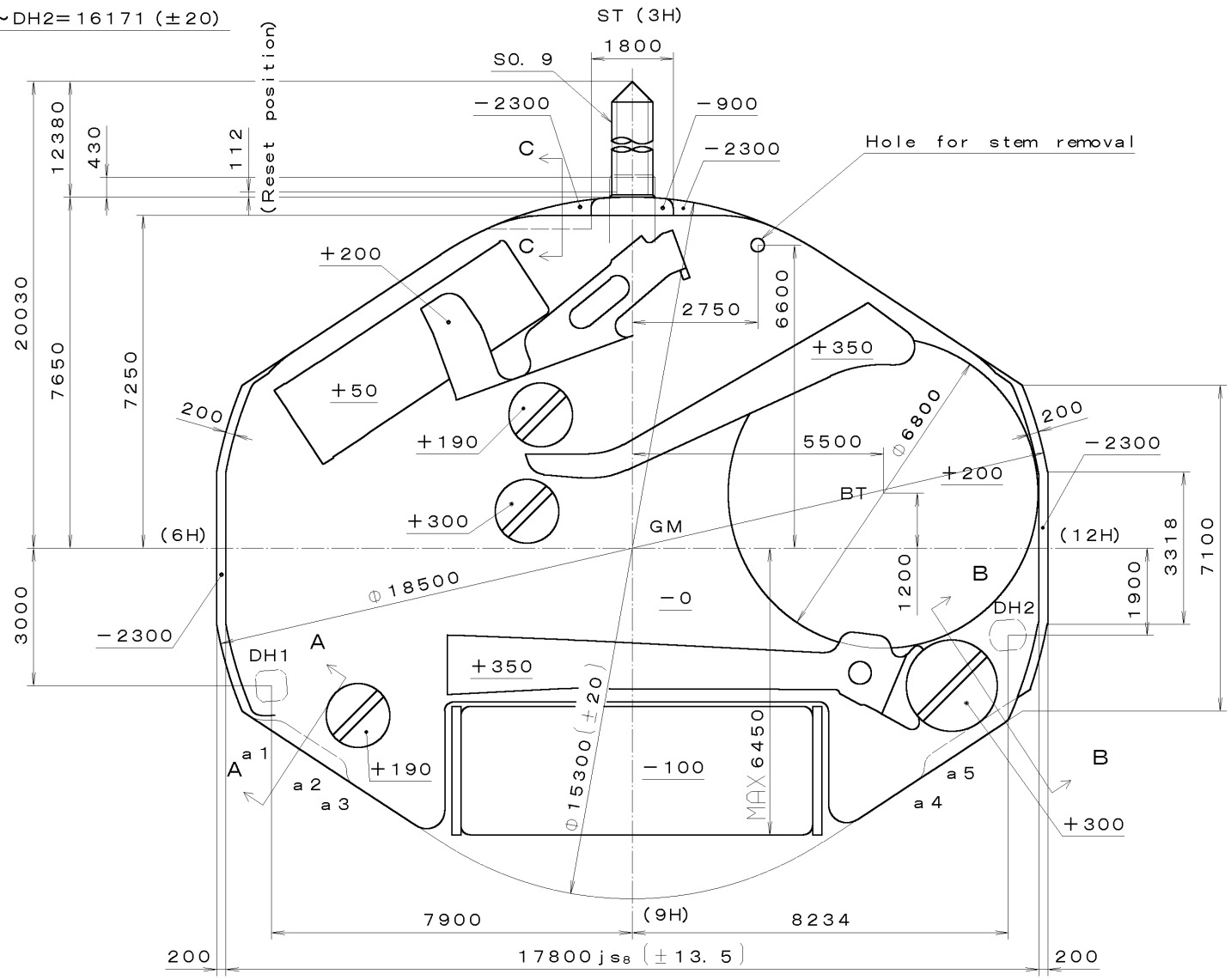

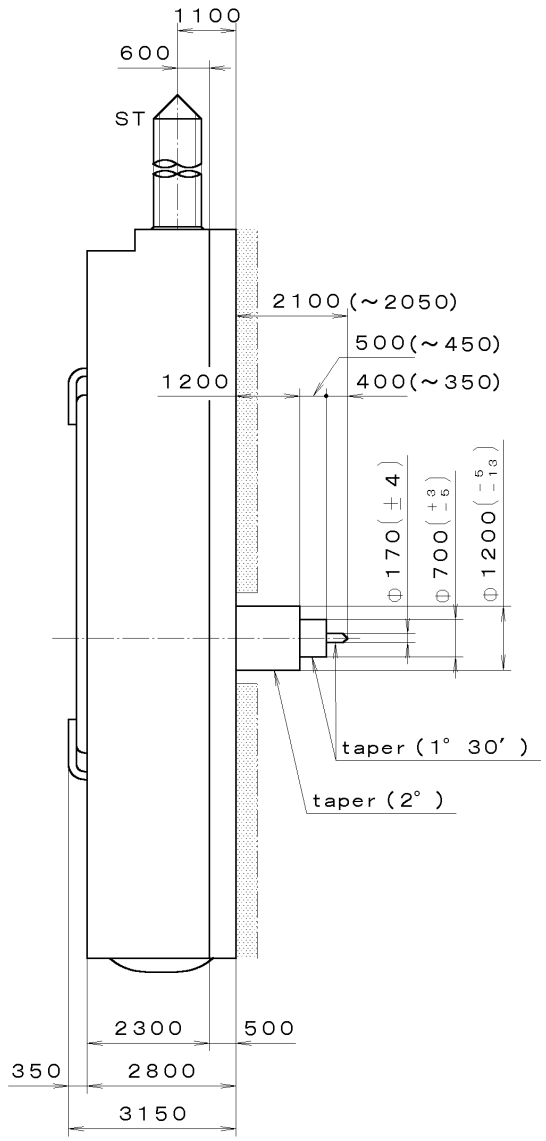

Coordinates

Mark	X	Y	R
GM	0	0	——
a 1	−7838	−4250	500
a 2	−6550	−4855	300
a 3	−5951	−4888	300
a 4	6101	−4790	300
a 5	6700	−4756	300

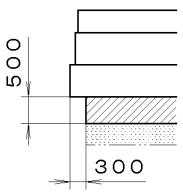

Section A−A

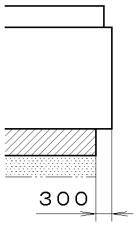

Section B−B

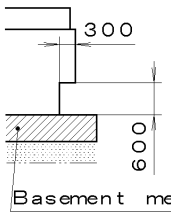

Section C−C

7			Quantity		Cal. No. : 2036
6			Unit	1/1000 mm	
5			Scale	10:1	Parts:
4			Date		
3			Drawn		
2			Checked	T. Hiruta	Name: Frame for Case
1			Approved		Drawing No. : 2036C000
Material					
Heat Treatment			General Tolerances		CITIZEN WATCH CO., LTD. TOKYO, JAPAN
Hardness			Dimensions		
Plating			Angles		

*** TIPW 2036 (01) *** (2100 1121) 00-10-19

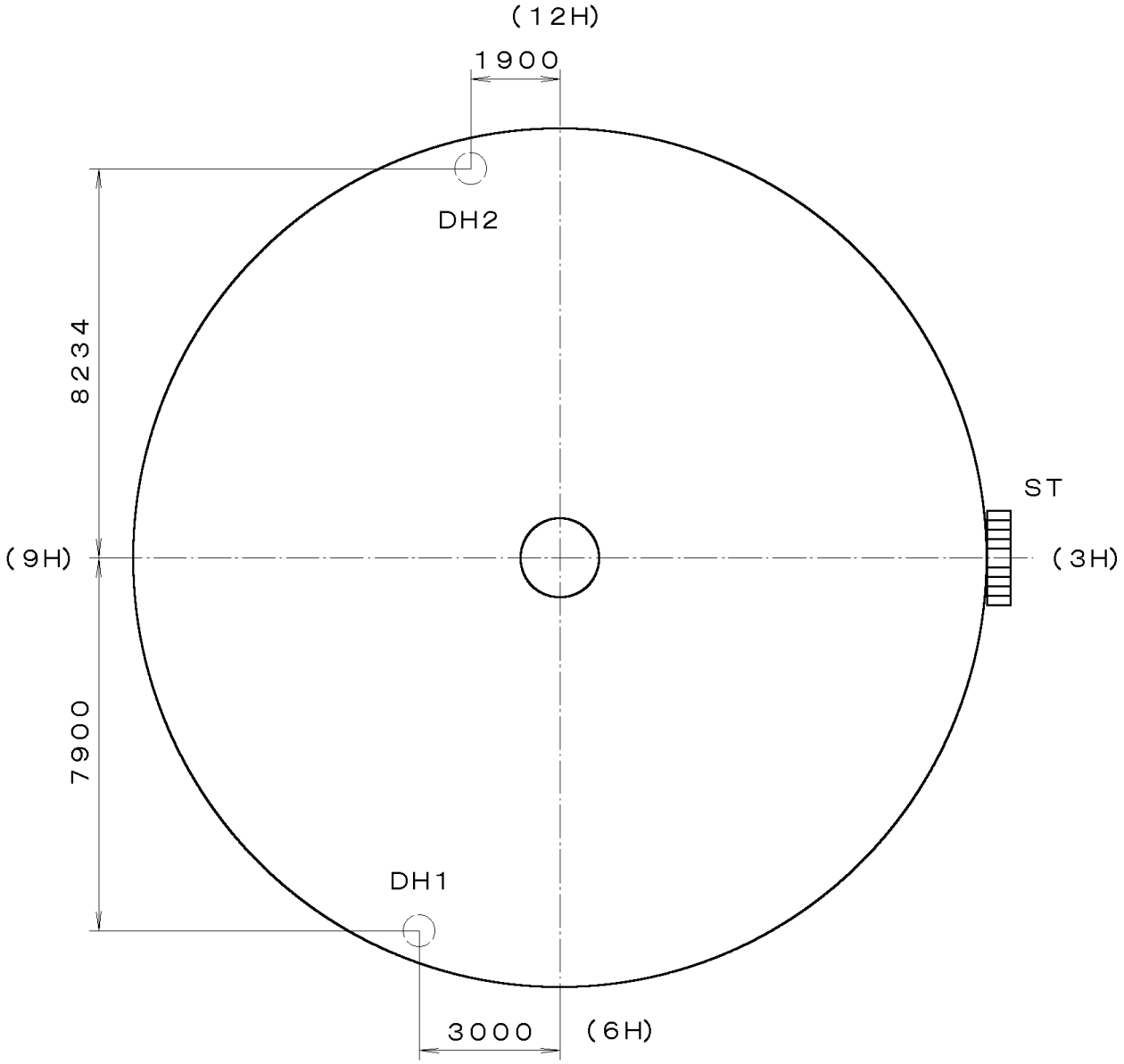

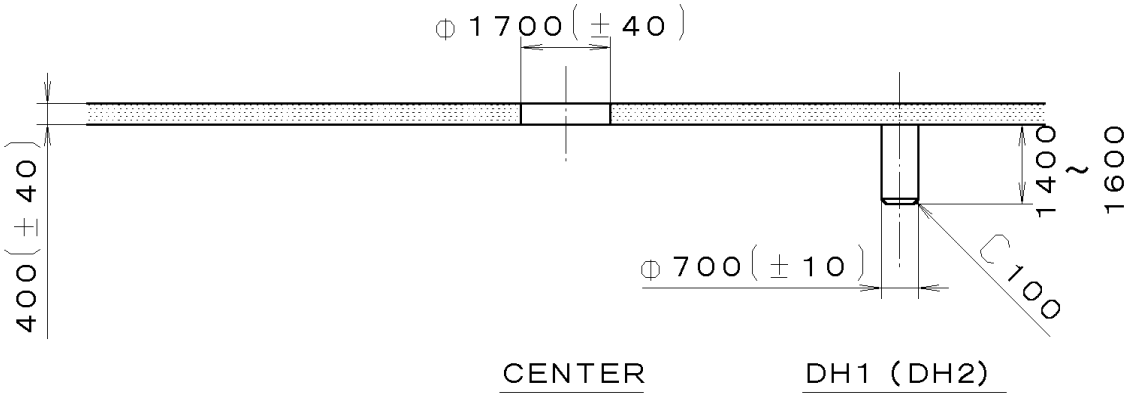

7			Quantity		Cal. No. : 2035−00A
6			Unit	1/1000 mm	
5			Scale	7:1	Parts:
4			Date		
3			Drawn		
2			Checked	T. Hiruta	Name:
1			Approved		Indications for Dial
Material					Drawing No. : 2035D000
Heat Treatment			General Tolerances		CITIZEN WATCH CO., LTD. TOKYO, JAPAN
Hardness			Dimensions		
Plating			Angles		

This drawing is provisional and subject to our reconfirmation and/or revision without notice.
*** TIPW 2035-00A (01) *** (2100 1121) 00-08-14

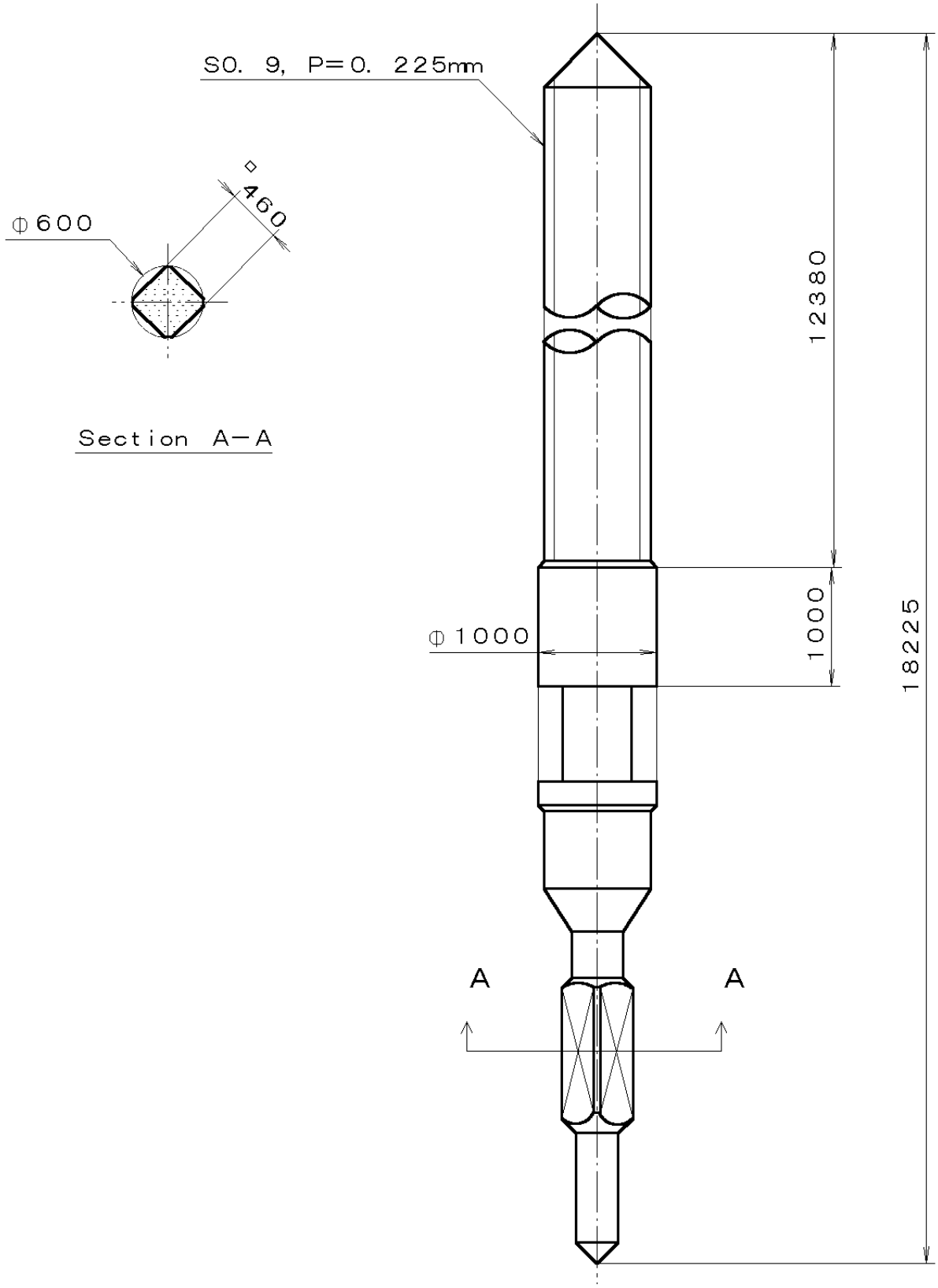

7			Quantity		Cal. No. :
6			Unit	1/1000 mm	
5			Scale	20:1	Parts: 065−468
4			Date		
3			Drawn		
2			Checked	T. Hiruta	Name: SETTING STEM
1			Approved		
Material					Drawing No. : 4680S000
Heat Treatment			General Tolerances		CITIZEN WATCH CO.,LTD. TOKYO, JAPAN
Hardness			Dimensions		
Plating			Angles		

This drawing is provisional and subject to our reconfirmation and/or revision without notice
*** TIPW 065-468 (01) *** (2100 1121) 00-07-28